American Standard

Style That Works Better

BARRIER FREE

DECLYN™ WALL-HUNG LAVATORY

VITREOUS CHINA

DECLYN™ WALL-HUNG LAVATORY

- Wall-hung sink
- Vitreous china
- Rear overflow
- Soap depression
- Faucet ledge
  Shown with 2000.101 Ceramix faucet (not included)

❑ **0321.026** With wall hanger (Illustrated)
Faucet holes on 102mm (4") centers

❑ **0321.075** For concealed arms support
Faucet holes on 102mm (4") centers

Nominal Dimensions:
470 x 432mm
(18-1/2" x 17")

Bowl sizes:
362mm (14-1/4") wide
273mm (10-3/4") front to back
152mm (6") deep

Compliance Certifications -
Meets or Exceeds the Following Specifications:
• ASME A112.19.2 for Vitreous China Fixtures

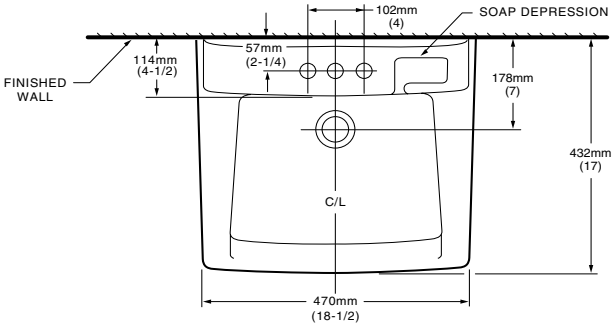

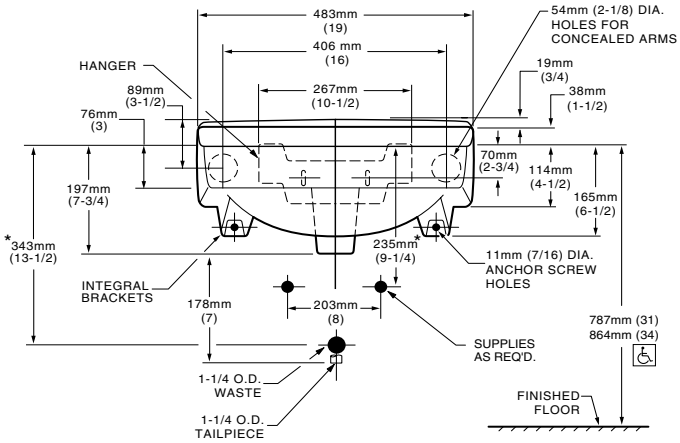

To Be Specified:
❑ Color: ❑ White ❑ Bone ❑ Silver
❑ Faucet*:
❑ Faucet Finish:
❑ Supplies:
❑ 1-1/4" Trap:
❑ Nipple:
❑ Concealed Arms Support (by others):

* See faucet section for additional models available

MEETS THE AMERICANS WITH DISABILITIES ACT GUIDELINES AND ANSI A117.1 ACCESSIBLE AND USABLE BUILDINGS AND FACILITIES - CHECK LOCAL CODES.
Top of front rim mounted 864mm (34") from finished floor.

NOTES:
***** DIMENSIONS SHOWN FOR LOCATION OF SUPPLIES AND "P" TRAP ARE SUGGESTED.
PROVIDE SUITABLE REINFORCEMENT FOR ALL WALL SUPPORTS.
FITTINGS NOT INCLUDED AND MUST BE ORDERED SEPARATELY.

IMPORTANT: Dimensions of fixtures are nominal and may vary within the range of tolerances established by ANSI Standard A112.19.2. These measurements are subject to change or cancellation. No responsibility is assumed for use of superseded or voided pages.

© 2008 AS America Inc.

Revised 7/07

Download from Www.Somanuals.com. All Manuals Search And Download.

Free Manuals Download Website

http://myh66.com

http://usermanuals.us

http://www.somanuals.com

http://www.4manuals.cc

http://www.manual-lib.com

http://www.404manual.com

http://www.luxmanual.com

http://aubethermostatmanual.com

Golf course search by state

http://golfingnear.com

Email search by domain

http://emailbydomain.com

Auto manuals search

http://auto.somanuals.com

TV manuals search

http://tv.somanuals.com